King Air

A MAGAZINE FOR THE OWNER/PILOT OF KING AIR AIRCRAFT

JANUARY 2021 • VOLUME 15, NUMBER 1 • $6.50

The Beechcraft King Air 260

Textron Aviation's Newest Turboprop

King Air

January 2021 Volume 15 / Number 1

A MAGAZINE FOR THE OWNER/PILOT OF KING AIR AIRCRAFT

Contents

2
King Air Family Expands
Meet the Beechcraft King Air 260
by Kim Blonigen

6
Stopover, Daytrip or Longer ...
Discover South Carolina's
Historic Treasures
by Matthew McDaniel

14
Ask The Expert –
King Air Electrical
Systems Evolution
by Tom Clements

22
In History –
Wichita Orphans – Part One
by Edward H. Phillips

30
Value Added

32
Advertiser Index

EDITOR
Kim Blonigen

EDITORIAL OFFICE
2779 Aero Park Dr.,
Traverse City MI 49686
Phone: (316) 652-9495
E-mail: editor@blonigen.net

PUBLISHERS
Dave Moore
Village Publications

GRAPHIC DESIGN
Rachel Wood

PRODUCTION MANAGER
Mike Revard

PUBLICATIONS DIRECTOR
Jason Smith

ADVERTISING DIRECTOR
Jenna Reid
King Air Magazine
2779 Aero Park Drive
Traverse City, MI 49686
Phone: 1-800-773-7798
Fax: (231) 946-9588
E-mail: jenna.reid@vpdcs.com

ADVERTISING ADMINISTRATIVE COORDINATOR AND REPRINT SALES
Betsy Beaudoin
Phone: 1-800-773-7798
E-mail: betsybeaudoin@villagepress.com

SUBSCRIBER SERVICES
Rhonda Kelly, Mgr.
Kelly Adamson
Jessica Meek
Jamie Wilson
P.O. Box 1810
Traverse City, MI 49685
1-800-447-7367

ONLINE ADDRESS
www.kingairmagazine.com

SUBSCRIPTIONS

King Air is distributed at no charge to all registered owners of King Air aircraft. The mailing list is updated bi-monthly. All others may subscribe by writing to: King Air, P.O. Box 1810, Traverse City, MI 49685, or by calling 1-800-447-7367. Rates for one year, 12 issues: United States $15.00, Canada $24.00 (U.S. funds), all other foreign $52.00 (U.S. funds). Single copies: United States $6.50, Canada/Foreign $9.00.

COVER PHOTO
Courtesy of Textron Aviation

King Air is wholly owned by Village Press, Inc. and is in no way associated with or a product of Textron Aviation.

King Air (ISSN 1938-9361), USPS 16694 is published monthly by Village Press, Inc., 2779 Aero Park Drive, Traverse City, Michigan 49686. Periodicals Postage Paid at Traverse City, MI. POSTMASTER: Send address changes to King Air, Village Press Inc., P.O. Box 1810, Traverse City, MI 49685. Telephone (231) 946-3712. Printed in the United States of America.

ADVERTISING: Advertising in *King Air* does not necessarily imply endorsement. Queries, questions, and requests for media kits should be directed to the Advertising Director, King Air, P.O. Box 1810, Traverse City, Michigan 49685. Telephone 1-800-773-7798.

MANUSCRIPTS: *King Air* assumes no responsibility for unsolicited manuscripts, photographs, or art work. While unsolicited submissions are welcome, it is best to query first and ask for our Writer's Guidelines. All unassigned submissions must be accompanied by return postage. Address queries and requests for Writer's Guidelines to the editor.

King Air Family Expands

Meet the Beechcraft King Air 260

by Kim Blonigen

> "... the King Air 260 combines the platform's rich history of rugged reliability and versatility with state-of-the-art upgrades and next-generation capability ..."

Production of the King Air 260 has already begun and certification and deliveries are expected early this year.

With an occupancy of up to nine, a maximum range of 1,720 nautical miles and a top cruise speed of 310 ktas, the Beechcraft King Air 200 series aircraft has long been the aircraft of choice for customers around the world. Textron Aviation says the King Air 260 combines the platform's rich history of rugged reliability and versatility with state-of-the-art upgrades and next-generation capability, offering a greater ease of flying.

In early December 2020, Textron Aviation, Inc. announced enhancements to its industry-leading Beechcraft King Air 200 series aircraft with the introduction of the King Air 260. Key improvements to the aircraft are the addition of the Innovative Solutions & Support (IS&S) ThrustSense® Autothrottle, along with a new digital pressurization controller. The cockpit also offers the Collins Aerospace Multi-Scan weather radar system as a standard feature.

The ThrustSense Autothrottle supports pilots in their critical mission of delivering people or cargo by automatically managing engine power from the takeoff roll through the climb, cruise, descent, go-around and landing phases of flight. This enhancement reduces pilot workload and is designed to prevent over-speed or under-speed, over-temp and over-torque conditions.

Another key update in the cockpit is the new digital pressurization controller, which automatically schedules cabin pressurization during both climb and descent, reducing pilot workload and increasing overall passenger comfort. The pressurization gauges have been integrated with the powerful Collins Aerospace Pro Line Fusion flight deck.

Besides incorporating the Innovative Solutions & Support (IS&S) ThrustSense Autothrottle in the King Air 260 cockpit, an STC has been approved for the Pro Line Fusion-equipped Beechcraft King Air 200 series aircraft. STC approval on Pro Line 21-equipped Beechcraft 300 series aircraft is anticipated soon.

Additional STCs announced for IS&S ThrustSense Autothrottle for Beechcraft King Air operators

Textron Aviation also announced supplemental type certification (STC) approval of the Innovative Solutions & Support (IS&S) ThrustSense Autothrottle on Pro Line Fusion-equipped Beechcraft King Air 200 series aircraft including new production King Air 260 turboprops. STC approval on Pro Line 21-equipped King Air 300 series aircraft is anticipated soon.

These STCs are in addition to the approvals of the autothrottle on the Beechcraft King Air 200 series equipped with Pro Line 21 avionics, the Beechcraft King Air 300 series equipped with Pro Line Fusion avionics and new production Beechcraft King Air 360 turboprops, announced in August 2020.

The IS&S ThrustSense Autothrottle delivers precision control to optimize power output. The enhancement reduces pilot workload by automatically managing engine power from the takeoff roll through the climb, cruise and descent phases of flight.

The company says the ThrustSense Autothrottle is robust but lightweight and can be installed with minimal downtime and no structural modifications to the existing throttle quadrant. Implementation is seamless and pilot control is intuitive.

STC approval of Garmin G1000 NXi-equipped Beechcraft King Air C90, 200 and 300 series turboprops is expected early this year.

Also included is the Collins Multi-Scan RTA-4112 weather radar which provides pilots with a fully automatic system that is optimized to detect short-, mid- and long-range weather. The system is designed to present an accurate picture of the weather around the aircraft, further reducing pilot workload.

Besides the cockpit, the King Air 260 cabin features newly designed seats created through an innovative pressure-mapping process that identifies ways to provide a more comfortable, relaxing journey for passengers, especially on longer flights.

"The Beechcraft King Air lineup is the most popular business turboprop in the world," said Rob Scholl, senior vice president, Sales and Flight Operations for Textron Aviation. "It's essential for us to continue exploring ways to bring innovation to such a renowned aircraft, and these enhancements will allow owners and operators to accomplish their various missions with greater comfort, technology and ease."

This introduction comes on the heels of the recently announced King Air 360, which achieved FAA type certification in October with customer deliveries already underway. Production has already begun for the King Air 260, and certification and deliveries are expected early this year. KA

THREE-WEEK GUARANTEED DOWNTIME ON STANDALONE GARMIN G1000 NXi INSTALLATIONS

At Elliott Aviation, we are Garmin's #1 King Air G1000 NXi retrofitter and we've completed **more Garmin G1000 installations than all other dealers in the world COMBINED!** We're so confident in our experience, we offer an industry-leading, three-week, $3,000 per day guaranteed downtime on standalone King Air Garmin G1000 NXi installations. As a Factory Authorized King Air Service Center, Elliott Aviation's Moline location offers on-site familiarization to make sure you are comfortable with your system before you leave.

The Garmin G1000 NXi Features the Following Upgrades over the Standard G1000:

- SurfaceWatch Runway Monitoring Technology
- Optional Cockpit Connectivity Including Automated Database Transfer
- MFD Display-Like in the HSI on the PFD (Can Include SafeTaxi, Flight Plan, METAR's and More)
- Greater Display Resolution and Brightness
- Improved Map Performance
- Many More Improvements!

GARMIN®

KING OF THE KING AIR

ELLIOTT® AVIATION

MOLINE DES MOINES MINNEAPOLIS 800.447.6711 www.elliottaviation.com

The Magnolia Plantation is one of the closest to the Charleston Int'l Airport (CHS) and could be toured during a few hours of downtime there.

Stopover, Daytrip or Longer ...

Discover South Carolina's Historic Treasures

by Matthew McDaniel

So much has been written about the aviation history of North Carolina that one wonders what is left to be covered there. One of its state mottos is "First in Flight" with obvious reference to the Wright Brother's history making flight testing and ultimate successes in the Outer Banks, Kittyhawk and Kill Devil Hills areas. Consequently, it seems like the Carolina's southern sister is rarely spoken of in aviation circles. Yet, like most U.S. states, South Carolina has much to offer the casual tourist and nearly all of it can be accessed via general aviation.

The Capital City: Columbia

Touring the capital city and/or capitol building of any state always holds opportunities for learning, entertainment and inspiration. All such cities are teeming with history and historic sites. In addition to being the center of government, most are also central locations for finance and/or industry for their respective state. In turn, most have a well-developed aviation infrastructure that invites corporate aircraft to frequent them. Columbia, located in the geographic center of South Carolina, is no exception.

The Columbia Metropolitan Airport (CAE) lies at the southwest edge of the city and is only 15-20 minutes driving time from the City Center and Historic Capitol Building District. It's a Class C airport with two runways, each exceeding 8,000 feet, with instrument approaches to all runway ends (including ILS Cat. I, II, and III and RNAV/GPS approaches with LPV minimums). Two full service FBOs offer all the assistance and amenities any King Air crew would typically need. For those wishing to arrive even closer to downtown Columbia and/or wishing to avoid the higher costs often encountered at the primary Class B and C airports, Hamilton-Owens Airport (CUB) is a pilot controlled airport, lying under the CAE Class C's eastern, outer shelf. Barely 10 minutes driving time from the capitol building, this single, 5,000-foot runway airport would be well suited for missions requiring

quick access to downtown Columbia, with a minimum of fuss upon arrival or departure. While rental cars are not available on the field, it's close proximity to Columbia's business district would make using various car services (Uber, Lyft, private limos, etc.) a simple affair.

Once downtown, Columbia is a walkable city. Within a one-mile radius of the capital building you'll find a wide variety of restaurants, cafes, and coffee shops. Additionally, the South Carolina State Museum, visitor center, multiple riverfront parks, the Columbia Museum of Art, and much more, are equally close. The capitol building itself, is a bit of a sleeper among the 50 we can each tour in the U.S. Nonetheless, it is both unique and steeped in complicated history. Its construction period was much longer than most state houses. The original architect, who began construction in 1851, was fired. Most of the initial groundwork had to be completely dismantled and work began anew in 1855. Progress slowed as civil unrest in the South leading into and throughout the Civil War began to affect available funds, materials and labor. In 1865, United States Union Army General Sherman entered Columbia while leading his infamous "March to the Sea," halting all progress on the structure. Union gunnery crews used the large target to sight and range their artillery. Today, six bronze stars mark the exterior, noting locations where artillery shells impacted the unfinished building. While the war

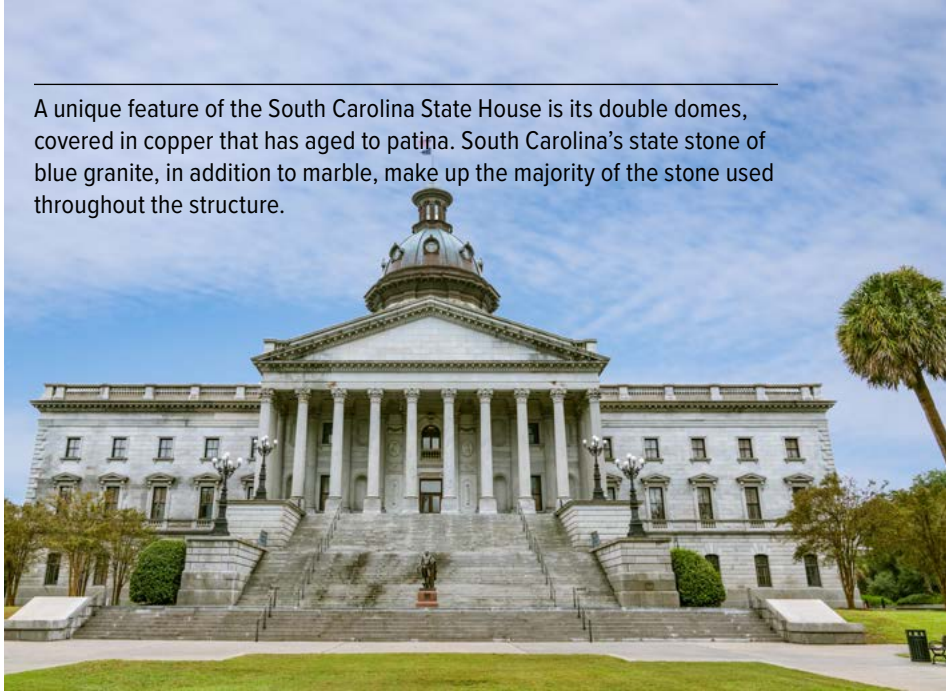

A unique feature of the South Carolina State House is its double domes, covered in copper that has aged to patina. South Carolina's state stone of blue granite, in addition to marble, make up the majority of the stone used throughout the structure.

Congaree National Park's Boardwalk Wilderness Trail allows visitors to stroll among the old-growth floodplain forest without getting their feet wet. Many of the trees are some of the largest of their species known to exist.

ended soon after, post-war economics in the South kept advancement on the building to a crawl and another decade was needed just to complete the main structural elements. The interior was completed between 1881 and 1891. Finally, it was not until 1907 that the exterior was completed. This 56-year construction timetable is one of the longest for any U.S. state capitol building.

Air of the Ancients

Twenty miles southeast of Columbia, lies one of South Carolina's hidden gems. There, a tiny stand of old-growth floodplain forest still flourishes. Now known as Congaree National Park, it protects 27,000 acres. Of those acres, 11,000 are nearly all that remains of what was once 35 million acres of such floodplain forests, stretching from Virginia to Texas along the Atlantic and Gulf Coasts. It is, by far, the largest tract of old-growth bottomland hardwood forest remaining in North America. Such forests were decimated for the wood used in ships, buildings and the railroad industry. Those trees will never repopulate, as the floodplains they are so well suited for were lost along with the trees; drained to create pasture, farmland and cities. It is only by a combination of luck and a few tireless individuals that this stand remains as an example of what once was. Massive trees stretching well over 100 feet tall, spreading their roots far and wide for stability in the swampy ground, and enduring for hundreds of years through hurricanes, fires and infestations. Congaree's floodplain forests are home to some of the largest trees east of the California Redwoods and Sequoias and many of the largest known examples of many specific species (Bald Cypress, Pawpaw, Sweetgum, Loblolly Pine) anywhere in the world.

While Congaree National Park is best known for its impressive trees, the forest makes up only about a third of its protected area. The remaining acreage is mostly natural floodplain and is teeming with amphibious creatures, waterfowl and insects and many species (both plant and animal) are rebounding as preservation efforts have brought forth positive results. Congaree contains many miles of hiking trails for closeup viewing of the forests, wetlands and wildlife. A 2.4-mile raised boardwalk loop trail is accessible year around, including by wheelchairs and strollers. The remaining miles of trails are natural and, given their floodplain home, vary greatly in condition from season to season and even day to day. While it is a perfect day trip from Columbia to visit Congaree, one word to the wise – it is not necessarily a year-round destination for those adverse to mosquitoes. The blood thirsty creatures are abundant in these soggy bottomlands and rarely do the winter's get cold enough to really knock down their population. They can be a nuisance throughout both spring and fall and torturous during summer. To avoid them (mostly anyway), winter is the best time to visit.

Heart of the Low Country

In South Carolina, Columbia and most other non-coastal areas are often referred to as Up Country; and it's the Low Country that is better known and more tourist driven. The Low Country is generally considered to be the coastal counties encompassing Myrtle Beach to the

As the operating hours come to a close at Fort Sumter and the sun beams descending towards the horizon, the flag is lowered. Volunteers line up downwind of the flag to prevent it from contacting the ground. Two active duty military members lower the flag, while a Park Ranger coordinates the ceremony and moves into position to disconnect the flag and direct its folding.

north and extending south to Hilton Head, Savannah, Georgia, plus the adjacent coastal sea islands. Precise definitions of the boundaries of the Low Country are debatable, but the location of its heart is commonly said to be Charleston.

Many airports and destinations in the Low Country would be inviting to King Air pilots for business or pleasure purposes. Beginning to the north, Myrtle Beach has three such airports; the Class D Grand Strand Airport (CRE), the Class C Myrtle Beach International (MYR), and the smaller, pilot controlled Conway-Horry Co. Airport (HYW). Georgetown Co. Airport (GGE) is also positioned along the coast, nearly equidistant between the Myrtle Beach and Charleston metro areas. Down south, the Class C Savannah-Hilton Head International (SAV) serves as the primary airport for both sides of the state line and is well known for being the home of Gulfstream Aerospace. While it is the Class D Hilton Head Airport (HXD) that puts you right in the center of one of the most popular tourist cities, Charleston is the largest city and metro area in the Low Country by a wide margin. A King Air pilot might find themselves there for any number of reasons and if there is any time for touring, Charleston can fill a few idle hours or keep you on the move for many days.

The pilot inbound to Charleston itself has choices. Charleston International (CHS) is a joint-use Air Force Base and civilian airline and corporate airport. While mighty C-17 Globemaster III military cargo planes loom large on the field, corporate iron and general aviation are equally well represented on the Atlantic Aviation and Signature Flight Support FBO aprons. CHS is supplemented by reliever airports on all sides of the city. Along the coast, south of the city and very near the popular Folly Beach area, is Charleston Executive Airport (JZI). "Exec" would likely prove the most popular for King Air missions, with its two runways (4,300 and 5,300 feet long), ILS and LPV approaches, and service-oriented FBO (Atlantic Aviation). Due east of Charleston, and also near the coast is the town of Mt. Pleasant (which has effectively become a Charleston suburb as the urban sprawl has practically connected the cities). Mt. Pleasant Regional – Faison Field (LRO) is a more general aviation-oriented airport just outside the CHS Class C with a single 3,700-foot runway, pilot control and basic services. Finally, north and northwest of CHS are the Berkeley Co. (MKS) and Summerville (DYB) airports. Both have slightly more runway length than LRO but are similar in facilities and services available. Regardless of which airport suits your mission or agenda, all are within 15 miles of CHS and even the furthest away (Berkeley Co.) is still well under a half-hour drive to the historic and tourist areas of Charleston.

Revolution to Dissolution

For any history lover with some idle time on their hands, Charleston has much to fill your time. Foremost is the area's rich military history. As a prime shipping port for the trade of goods between both Europe and the American colonies and, later, between the northern and southern states, Charleston Harbor contained turbulent waters in both

A cannon aimed through a lower gun port of the left flank wall of Fort Sumter. A section of Charleston skyline can be seen in the background.

the American Revolution and the Civil War. Interestingly, Charleston's most famous events were dramatic losses for what we would now call "The United States" in both conflicts. Sites, memorials and museums dedicated to one or the other can be found scattered throughout the Historic District and surrounding the harbor.

Locked in stalemate in the northern theater of the Revolutionary War, the British decided to shift their focus to the southern theater, beginning in December of 1779, when over 13,500 British troops set sail from New York, bound for Charleston. There, in March 1780, they rendezvoused with additional British troops and quickly began to surround Charleston and lay siege upon her residents and defenders. By April, the American colonists were trapped in the city and British warships controlled the harbor, as well. American commander, Gen. Benjamin Lincoln, offered to surrender to save his men. British commander, Gen. Henry Clinton, would not agree to the terms and continued to bombard the city while demanding that Gen. Lincoln surrender himself and his men without condition (terms Lincoln refused). So, the British answered by heating their cannon balls and artillery shells and proceeded to set most of Charleston ablaze. With little choice, on May 12, 1780, Lincoln surrendered unconditionally, dissolving his 5,000-man army and dealing the Americans their worst loss of the Revolution. Today, the Historic District on Peninsula Charleston can be toured on foot or via a variety of tourism trolleys, carriages or shuttles. More stories of the Siege of Charleston, its aftermath, and the eventual liberation of the city come into focus as one steps foot inside the sites preserved from a time before the United States existed.

Three generations later, the still-new United States was crumbling under the weight of its own contradictions. Were all men created equal, or was it morally just for some humans to be owner and enslaved by others? South Carolina led the charge on Dec. 20, 1860, by seceding from the Union, effectively dissolving the United States as it existed prior to that day. Immediately thereafter, the rogue state demanded that the U.S. Army surrender control of its military facilities in Charleston Harbor. Instead, U.S. forces secretly consolidated into Fort Sumter (the most heavily fortified of the facilities in and around the harbor). There, they hunkered down for the 1860-61 winter season, surviving and preparing for war on the few supply shipments that could reach them unencumbered. By April 1861, they were as dangerously low on supplies as they were in imminent danger of attack from their non-defensive side (in that their fort was designed to defend harbor attacks from the Atlantic, rather than to defend itself from attacks from its sister-forts which ringed the harbor). Finally, the fateful day arrived and at 4:30 a.m. on April 12, 1861, a single 10-inch mortar was fired upon Fort Sumter from nearby Fort Johnson. It was the shot that set off the deadliest conflict in American history. When the signal mortar exploded above Fort Sumter, illuminating its prey, 43 additional guns and mortars began what would be a

Some of Charleston's streets still date back to the 18th century. Walking tours of the city's historic district are popular, whether self-guided or as part of a tour group. As with this street, it feels as though one is never more than a short stroll from a seaside vista in Historic Charleston.

34-hour bombardment. Hellfire rained down upon Fort Sumter from all directions – Fort Johnson (to the west), Fort Moultrie (to the east), Cummins Point (to the south), and Floating Battery (to the north). Union forces surrendered at 2:30 p.m. on April 13. The Confederacy had won this first battle but, as we all know, would ultimately lose the war. Nonetheless, Fort Sumter would remain in Confederate hands for almost the entire war, playing havoc with the Union's naval blockade. It wasn't until four years later (to the day) that Fort Sumter would officially be, again, under Union control. Though, by that time, much of it lay in piles of rubble from the many attacks and bombardments it endured while in Confederate hands.

All of these sites are readily accessible and enjoy some level of tourism today. Being part of the National Park System and designated a National Monument, Fort Sumter itself it by far the most popular. Ferries to the fort depart regularly from Liberty Square (where the Fort Sumter Visitor Center and Ferry Terminal are located) and visitors can tour the fort and the museum that now reside within it at their own pace. Of particular interest are the daily flag raising and lowering ceremonies, both for their built-in history lessons and their patriotic flair. If your timing coincides, be sure to be at the central flagpole to watch (or participate).

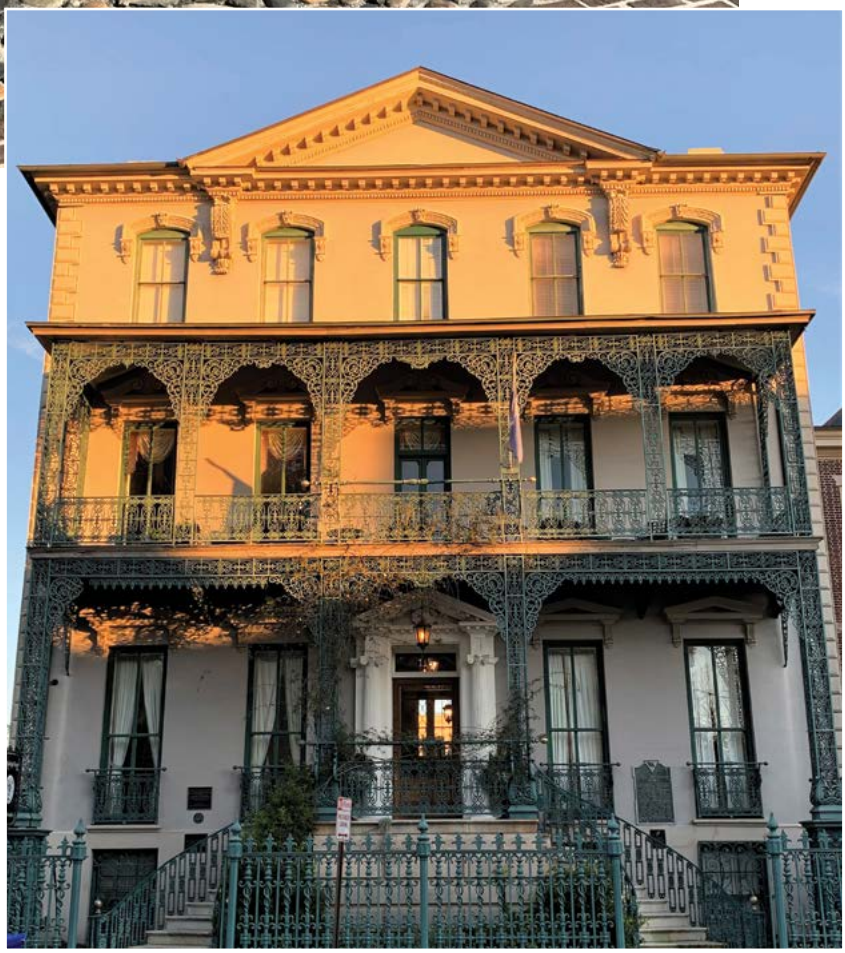

The sun rises on the John Rutledge House (circa 1763). This beautiful B&B is just one of scores of old manor homes in Charleston that now function as B&Bs, fine dining restaurants, cafes, boutiques, etc. If your Charleston stay includes one or more overnights, skip the chain hotels and seek out such a B&B for a real taste of Charleston history, culture, and hospitality.

Changing Tides

Back on the mainland, Charleston is filled with historic homes and surrounded by historic plantations that are open for tours. Such places are great for filling an hour, a half-day, or more, depending on their size and location relative to your chosen airport. While some (myself included) may recoil at how most of these places came to be (built by slave labor), they still hold an important history. If nothing else, they can serve as critical reminders of what enslaved people endured and of the utter inequity of the "system" in place in those times. The Magnolia Plantation and Drayton Hall are both popular destinations and very close to CHS airport. Whereas the picturesque Charleston Tea Plantation is closest to JZI. If Mount Pleasant and LRO airport is your area of choice, the Boone Hall Plantation and the Charles Pinckney National Historic Site are both mere minutes away.

Like so many of our coastal areas, Charleston and treasures such as Fort Sumter are under imminent threat from climate change and rising sea levels. The sea level in the Charleston area is now 10 inches higher than it was in 1950. The pace of rise is accelerating and is currently at about one-half inch annually. Multiple studies of the problem estimate that, without significant intervention, the rising sea levels will begin to swamp Fort Sumter's parade grounds within a decade. If South Carolina is on your flight agenda in the near future, plan some extra time for touring or consider how best to utilize your downtime to take in some of the sites of this beautiful state. KA

Matthew McDaniel is a Master & Gold Seal CFII, ATP, MEI, AGI, & IGI and Platinum CSIP. In 30 years of flying, he has logged over 19,000 hours total, over 5,600 hours of instruction-given, and over 2,500 hours in various King Airs and the BE-1900D. As owner of Progressive Aviation Services, LLC (www.progaviation.com), he has specialized in Technically Advanced Aircraft and Glass Cockpit instruction since 2001. Currently, he is also an Airbus A-320-Series Captain for an international airline, holds 8 turbine aircraft type ratings, and has flown over 90 aircraft types. Matt is one of less than 15 instructors in the world to have earned the Master CFI designation for 9 consecutive two-year terms. He can be reached at: matt@progaviation.com or (414) 339-4990.

King Air Electrical Systems Evolution

by Tom Clements

This article first appeared in the January 2012 issue of this magazine. It is also a chapter in ***The King Air Book – Volume II.*** *It is significant enough to merit reprinting here both to enlighten newer readers, as well as to provide a review for seasoned King Air veterans.*

The original King Air, the 65-90 model that came out in 1964, was basically a Queen Air with the Lycoming engines exchanged for the first version of the Pratt & Whitney PT6A powerplant and the fuselage modified and strengthened to allow for a meager pressurization system. Two years later, the A90 model replaced the "Straight 90," and with it came a number of very significant improvements, including: A totally redesigned cockpit layout that contained an annunciator panel; reversing propellers were offered as an option (to the best of my knowledge no A90 was manufactured without that popular option); driving the pressurization system's air compressor (supercharger) off of the left engine's accessory case, mechanically, instead of via a hydraulic motor driven by a hydraulic pump on that same engine; and a redesign of the electrical system into one that continues, with various modifications and improvements, as the design is still in use on the King Air 250. The aim of this article is to present an overall view of the King Air's electrical system and to elaborate on some significant changes that occurred along the way. I will also discuss the Five-Bus system that first appeared on the F90 model in 1978 and that continues in the current C90GTx and the 350-series.

There are four sources of DC (Direct Current) electric power in a PT6-powered King Air: (1) a single battery housed in the right wing's center section, (2) in front of the main spar, (3) two identical engine-driven generators, and (4) sometimes, an External Power Unit (EPU). The B100 model, powered by the TPE331 engine, uses two batteries, one in each wing's center section, due to the greater starter demand of its fixed-shaft turboprops.

The first battery used was a 19-cell Nickel-Cadmium without provision for air cooling. In the mid-1970s the standard factory-installed battery became a 20-cell NiCad and the battery box including ram air cooling. This was about the same time that the battery monitoring system was included, with its *battery charge* annunciator that could indicate the early stage of a thermal runaway. Improved lead-acid batteries first became popular as an STC'd replacement for the more-expensive and potentially more troublesome NiCads, and in the 1990s the factory discontinued the use of NiCads and went to a Concorde VRSLAB (Valve-Regulated, Sealed, Lead-Acid Battery) replacement. The battery charge annunciator is no longer required with a lead-acid battery since that battery does not have thermal runaway potential.

The battery is typically wired directly to a bus that is always "hot" with voltage whenever the battery is installed. This bus is named the "hot battery bus" and is usually located in or very near the battery box. Some convenience items as well as some components that were considered most important by the engineers receive power from this bus. These include the door and baggage compartment lights, boost pumps and crossfeed in the LJ-series, and, often, standby fuel pumps and fuel firewall shutoff valves. The fuel-related items that receive power from this hot battery bus, for redundancy, also receive power from their own fuel panel bus after the battery and/or generator is switched on, as we will see.

The generators, which of course do double duty as the starter motors, as well, are made by Lear-Siegler and originally were rated at 200 amperes maximum continuous output. Beginning with the C90- and the 100-series, better cooling ducts were incorporated that allowed the maximum generator output to be upped to 250 amps. Instead of presenting the generator output on a gauge that was marked in amps, the decision was made to mark the gauge with decimal equivalents relating to the maximum rating. For example, with the 250 amp generators,

a gauge reading of 0.20 would indicate a current output from the generator of 50 amps (250 amps maximum x 0.20). In more recent years these gauges – load meters – are marked in units of percent, so the 0.20 reading would now show as 20%.

It is important to realize that there really is no actual limit on maximum generator output. If a direct ground short were to occur on the generator output line, current will immediately rise to 1,000 amps or more! This excessive workload would create too much heat that could, given enough time, cause the generator to undergo an ugly and expensive death. A lot of King Air pilots and even instructors suffer under the misconception that any ground short will be handled automatically without the need for pilot action. Not true. Although the melting of a large fuse – called a current limiter – will protect the *opposite* generator and the battery from harm, the only thing that saves the shorted generator from its ugly demise is the pilot turning off its switch … in reaction to the load meter on that side being pegged out at more than a 100% reading.

So, when it is stated that 250 amps is the maximum continuous output, it is really saying that this is the maximum output that may be sustained, under certain conditions, while still being able to maintain the correct output voltage and without overheating taking place. The "certain conditions" referenced here has to do with how much airflow is pumped through the generator by the cooling fan built into the back of the unit, where the cooling duct connects. The two factors that most determine the airflow are N1 speed and altitude. The fan is turning at the same percentage of its maximum speed as the N1 gauge reads. At an idle speed of 60%, for example, the fan is also turning 60% of its highest speed so it cannot provide the same cooling as it would at cruise power. (Actually, that is not totally correct since the maximum Ng speed of PT6s is either 101.5% or 104%, but close enough.) Of course, since air density decreases with altitude, less airflow takes place the higher one flies, even for the same N1 speed. This explains why the POH typically shows lower sustained load meter limits on the ground with idle speeds and in flight at very high altitudes.

The previous paragraph included the phrase, "… while still being able to maintain the correct output voltage …" The target voltage is 28.25 volts with an allowable tolerance of ± 0.25 volts. Thus, any voltage between 28.0 and 28.5 is proper. No instrument can ever be totally accurate and the typical King Air voltmeter can have up to a 0.5 volt error and yet still be considered acceptable. That explains why in some POHs the statement appears that, during the electrical system *After-Starting* checks, the voltage must be between 27.5 and 29.0. These numbers are derived by including the possible gauge error into the correct voltage range.

Early 90- Series

Prior to LJ-678 (C90), LW-157 (E90), and B-224 (A100), the voltage output of the generators was controlled by a carbon-pile type of device that was not nearly as accurate and predictable as what we have come to expect in the modern digital age. To keep voltage within proper limits and to make the generators share their current output equally – i.e., provide good paralleling of the load meters – were difficult aims to achieve and almost impossible to maintain over any significant period of time. However, beginning with the serial numbers noted above, a solid-state Generator Control Unit (GCU) was made standard equipment and what a nice difference it made! Now voltage rarely strays out of the expected range and generator paralleling is so perfect that an imbalance between the left and right load meters becomes the exception rather than rule.

One can recognize that the plane was built with the new GCUs by observing whether or not the generator control switch has the third, top, "Reset" position. That reset position means GCUs are installed. With the old-style system, the generator switch was merely On-Off, two positions, up and down.

Just as a municipality's water pressure would drop if every resident opened every spigot and tap at the same time, causing too much water demand, also no generator can maintain proper voltage when its current outflow gets too large. Although this will happen in the event of a short to ground, a more common example of this is when one generator is assisting with the start of the opposite engine. Have you ever monitored voltage while you activate a starter switch? It surely makes a momentary big drop, doesn't it? No wonder the lights go dim for a while.

When switched on, each generator feeds directly into its own main bus, also called the generator bus. As a general rule, with minor exceptions, the main buses have the electrical components that use higher amounts of current connected to them. Landing gear motor, air conditioning motor, windshield heat, cabin electric heat (when applicable) … are obvious candidates for being main bus items. Not quite so obvious are avionics buses, inverters and flap motors, but they, too, almost always are fed by a main bus.

Components that use only a small amount of electric power receive that power from subpanel buses. These buses, for redundancy, are in turn fed not just from one side's main bus but from both. A circuit breaker (CB) rated at 50 amps protects the wire going from each main bus into the particular subpanel bus. Therefore, each subpanel has two, 50 amp, *feeder* CBs associated with it. With nothing else, however, this would compromise the separateness of the two main buses, since now there is a bridge between left and right sides via the subpanel and its two feed wires. What's that I see riding over the horizon to our rescue? Why, it's Sheriff Diode!

Yes, the necessary and often-used, one-way "checkvalve" for current flow, the lowly diode, is the device that allows both main buses to feed to the subpanel but do not allow current to flow from the subpanel back into the main bus. Every subpanel feeder CB has a diode between it and the subpanel to prevent return flow.

I speculate that the designer who made the decision of what small components would be wired to which of the two subpanels had his reasons for placing things as he did, but I'll be darned if I know what the reasons were! Only when we get to the 100-series does logic seem to dictate the selection. For the A90, B90, C90, C90-1 and E90 systems, the only way to know which items are wired to which bus is to consult the electrical system schematic in the POH or Wiring Diagram Manual (WDM).

Whenever a technical writer takes a complex subject and tries to present it in an understandable manner to a non-technical reader, challenges arise. If the writer makes it too simple, often details are ignored that may be important for better understanding. On the other hand, if he tries to describe every minute detail, the reader is quickly lost or put to sleep! Likewise, the drawing of the POH's electrical system schematic always becomes a compromise between accuracy and understanding. I personally think the Beechcraft POH writers did an excellent job at this compromise, although I know others may disagree.

In the POH's schematic, each main and each subpanel bus is rendered as if it were a single strip of metal with all associated components wired off of the bus one-by-one, side-by-side. In the real

airplane, often that is not the case. For example, although the majority of main bus items receive power from the vicinity of the cockpit console, the inverters tap off their power from an area in the main wheel wells.

So please take what I am about to write as a compromise between accuracy and understanding, OK? It is not technically correct in all respects but it will generally be helpful. Here goes: The main buses are underneath and inside the cockpit pedestal whereas the subpanel buses are generally in the area we call the instrument panel subpanels … the hard-mounted black metal ahead of the crewmembers' knees, where lots of switches and CBs are located. It follows that the 50-amp subpanel feeder CBs, as well as CBs for things like landing gear motor and windshield heat are located on the aft end of the pedestal, whereas most of the subpanel items involve the switches and CBs in front of our knees.

There are two more cockpit locations of electric switches and/or circuit breakers: the left and right sidepanel areas. The left sidepanel, next to the pilot's left elbow, has traditionally been devoted to the King Air's fuel panel. The right sidepanel is devoted mostly to CBs or fuses that protect the engine instrument circuits.

The engine instruments are definitely subpanel-connected items.The fuel panel items, however? The reasoning behind the design has probably been lost in the mists of long ago times, but the electric power received by the left and right fuel panel buses come from two of the four subpanel feeder CBs, yet it comes via a separate wire branch that has nothing to do with either of the two subpanels. The diagram, shown above, may help explain.

As the A90 evolved into the B90 and as the B90 evolved into the C90, only minor changes occurred in the electrical system. One of the more significant changes, occurring at LJ-773, LW-278, B-241, and BE-41,

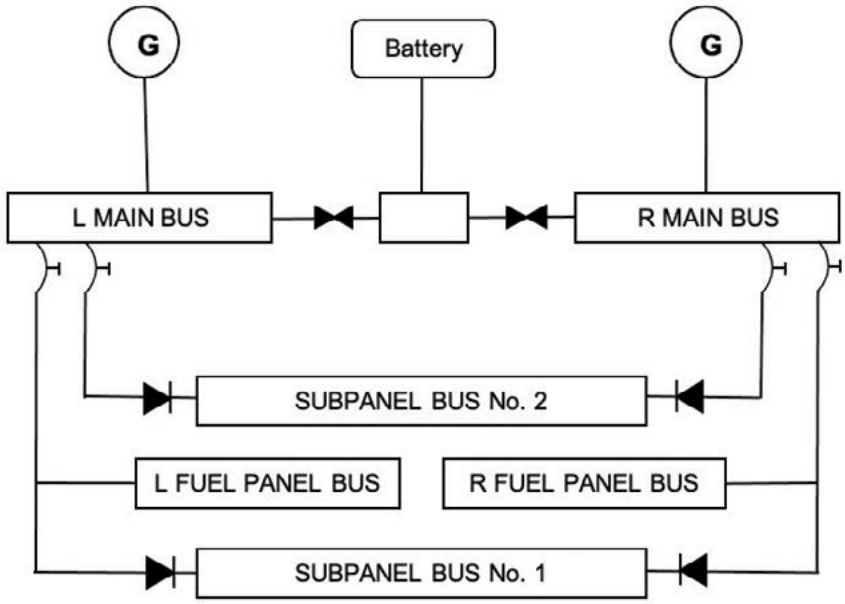

involved a rewiring of the external power circuit such that the battery switch must be on before the external power relay can close, allowing the external power to flow into the airplane. Beech always specified that the battery switch should be on before the external power unit was energized and kept on while the EPU was in use, but in the later serials it is a physical requirement. By having the battery on line along with the EPU we have two, not just one, power sources. An advantage of this is that a start will continue successfully even if the EPU malfunctions and cuts out before the engine had reached its self-sustaining speed. Also, the battery provides a cushioning effect, permitting the airplane to experience less of any voltage fluctuation that the EPU might provide.

100- Series

In 1969, the first long-cabin King Air was added to the model lineup: the BE-100. Although the electrical system remained nearly identical to the one in the LJ-serials (B90 model) in production at that time, the decision was made to add more logic to the location of various smaller subpanel components. Whenever there were two identical components – for example, two pitot heaters, two bleed air flow packs, two oil temperature and pressure gauges, two start switches, etc. – the left one of these would always be wired to the same subpanel bus and the right one would receive its power from the other subpanel. No longer did the electrical schematic label them "Subpanel Bus No. 1" and "Subpanel Bus No. 2." Instead, they became the "LH Loop" and the "RH Loop," reflecting where the identical left and right components were connected.

Two comments need to be made here. First, due to the diodes, current cannot "loop" through the subpanels from one main bus to the other side's main bus, as we have discussed. Yet, looking merely at the path of the wires it does seem that the subpanels form loops from one side to the other, so the "Loop" terminology was used. Second, there are so very many components that are not duplicated on both left and right sides, that there is still a lot of arbitrary selection that must occur: Where do we put the single stall warning heater circuit, the single nav light circuit, the single pressure control CB? So, both the LH Loop and the RH Loop contain many items that do not fit within the left-right separation.

Further, in the 100-series, the labels above the four, 50-amp subpanel feeder CBs on the aft end of the cockpit pedestal were totally changed. In the 90-series, the four

breakers have a single label that covers the entire group of four – Subpanel Feeders. When an operator wants to designate a particular one of these four, he must say, "The far left one," or "The second one from the right," etc.

In the 100-series, however, to keep following the Loop concept, the four breakers are now labeled, in order from left to right: LH #1, RH #1, LH #2, and RH #2. The first and third of these are the first and second feeders for the LH Loop, and the second and fourth are the first and second feeders for the RH Loop. The first feeder for both loops comes from the left main bus and the second feeder comes from the right main bus. Until this unusual CB labeling is explained and understood correctly, it can be very confusing: How come a CB labeled "RH" originates from the left main bus?! However, when it is recognized that the LH and RH labels refer to the loops being fed whereas the #1 and #2 labels refer to the source side, clarity is achieved.

Now I'll let you in on a surprising and weird little piece of design sadism that took place. Guess which subpanel CB has the branch going to the left fuel panel? The correct answer is "RH #1." Vice versa, the "LH #2" CB feeds the right fuel panel! Although this is not as crazy as it first seems when one associates the #1 label with left side and #2 label with right side, the designer could just as easily have used "LH #1" to feed the left fuel panel and "RH #2" to feed the right fuel panel and the labeling mismatch would have been avoided. Oh well …

200-Series

In 1972 Beech started working on the first Super King Air, the wonderful model 200 that has become the best-selling of all the King Air models. In addition to the obvious improvements of more power, more fuel, a longer wingspan and more pressurization capability, the engineers were also tasked with trying to improve on all systems and to make the airplane more maintenance-friendly.

One system improvement was the elimination of the fuel panel bus weakness of the 90- and 100-series: Namely, that the items thereon were not dual fed for redundancy but received power from a single subpanel feeder CB. To correct this, Beech went from two to four subpanel buses, with the names of, not surprisingly, Dual Fed Bus #1, Dual Fed Bus #2, Dual Fed Bus #3, and Dual Fed Bus #4. To keep the left-right thing as logical as possible, all left side items are now associated with an odd-numbered bus and all right-side items with an even-numbered bus. Dual Fed Buses #1 and #2 have all of their CBs and/or CB-switches on the cockpit's right sidewall or on the instrument subpanels; #3 and #4,

however, are exclusively located on the left sidewall, where the fuel panel is located. Unlike in the past, the CBs on the left sidewall would include some items not associated with the fuel system: Flaps and ignition, for example.

Also, the 200-series moved the main buses from the cockpit pedestal to a location in the cabin aisle, just aft of the main spar. A neat panel is located there under a clear plastic overlay that is painted with labels showing exactly what's what. As in the past, two spare 325-amp isolation limiters are installed near the main buses to be available for on-the-road replacement.

The Five Bus System

It might be said that the model 200 was a Super 100 since it had the same cabin size but offered a tremendous increase in overall performance. The Beech engineers were given the directive to create a similar change for the 90-series: To develop a Super 90 that would be head and shoulders above its C90 and E90 siblings.

Off to the drawing boards they go. Wow! Here it is 1978 and we get to modify what was first designed in 1963! What improvements we can make! Let's redo the nose profile to eliminate the "flat face" of the King Air and go with a sleek profile like that used on the Model 60 Duke. Let's go with a wet-wing system and eliminate the bladder tanks. Let's go with a whole new wing but using the landing gear from the 100-series, to allow for a higher gross weight. Let's redesign the electrical system to make it more modern, copying a lot of what Boeing did on the 737. Let's use the T-Tail Rudder Boost system, and cockpit layout of the 200, along with its automation of the fuel transfer system. Lastly, let's use the 200's stronger cabin door and dual-pane cabin windows so that we can increase the pressurization differential. We'll call this model the F90.

Not many of my readers probably remember those days of the 1970s. The Carter presidency saw nearly runaway inflation and prices were soaring dramatically. After the Beechcraft financial analysts reviewed the changes that were planned, they concluded that this proposed F90 would need to cost more than its big brother, the 200, to account for these major changes that were to be paid for in late-1970s dollars! Oops, that cannot be! So, the engineers were sent back to the drawing boards with orders to tone it down, keep the price in line with reasonable expectations.

The pressurization increase, the T-Tail, the 200-style cockpit layout, the automated fuel transfer, the landing gear from the 100-series, and the 737-like electrical system were retained. The rest was tossed. So, let's talk about this new electrical system that first appeared on the F90 but continues in the C90A, C90B, C90GT and all its variants, as well as on the entire 300-series.

Although this article cannot go into the depth required to really "teach" this new system, I will say that one of the few similarities to the older system is the presence of left and right generator (Main) buses. Instead of subpanel buses, we now have a triple-fed bus, a center bus, and, as before, a hot battery bus … five buses in total, with the airplane's components distributed among them appropriately. Of special interest is the fact that three Hall Effect Devices (HEDs) are included. These devices – not yet available back in the '60s – allow excessive current flow to be terminated instantaneously, based on the increase in magnetic field around the wire, instead of waiting for the heat buildup to melt a fuse or blow a CB … a safer design.

Also, the new system includes "Automatic Load Shedding." Previously, in the rare situation in which both generators were lost, it was incumbent upon the pilot to rapidly turn off the unnecessary, heavy load, components so as to prevent the battery from being discharged too rapidly. In the new system, when the second generator fails, bus tie relays open automatically to disconnect the generator buses from the battery. Hence, the battery only supplies those items located on the hot battery bus, the triple fed bus, and the center bus, and thereby prolongs its life a great deal. (It is nearly impossible to explain this satisfactorily, but the heavy load items on the center bus – electric heat and air conditioning motor – are also "shed" in this scenario.)

Because of the bus that is fed from the left generator, the right generator, and the battery, too, with the name triple-fed bus it seems that this new system is often called the "Triple-Fed Bus System," which is OK. Some, however, leave out the "Fed" and say the "Triple Bus System." Huh? But there are five buses! I try to be consistent and always refer to this as the Five Bus System. (The 350 kinda, sorta, has a sixth bus, the dual fed bus, but it really acts as an extension of the hot battery bus.)

As in any new design, some minor shortcomings surfaced after the system got into customers' hands and feedback was received. The most significant of these was that the voltmeter did not allow inspection of all five buses, only three (triple fed and left and right generator buses).

Beginning with the F90-1 in 1982, all the 300-series and the C90A and models after, this was corrected with a voltmeter that included the missing buses. Actually, all voltmeters on five bus airplanes also include an extra position that allows EPU voltage to be measured and assessed *at the plug,* before the pilot turns on a new-to-this-design external power switch to allow the external power relay to close and introduce the EPU power into the airplane. With this switch, although the battery still *should* be on while using external power, the EPU connection will work with or without the battery switch on, just like in the early King Airs.

A controversial question that arises concerning the five-bus system is, "Do we, or do we not, manually close the generator bus ties prior to start?" In all of these systems, the start will be absolutely normal whether we do or do not. Realize that when the first generator is turned on, both left and right generator bus ties close automatically so from that point on there is zero difference. Yet, some POHs direct us to close the ties prior to start while others don't. Why the difference?

The answer to this "discrepancy" has to do with where the rotating beacon(s) receive their power. For the F90, C90A-series and 300 models, the beacon is wired to the left generator bus. Since this bus does not get power until either generator is on, or an EPU is in use, or the bus ties have been manually closed, it means the beacon would not be rotating prior to the first engine start. Realize that one of the FAA's recommendations is to always have the beacon on before a propeller rotates … as a safety measure to let people know that they should "step away from the airplane!"

Now, just between you and me, if an innocent bystander were standing within the arc of a PT6's propeller when someone hit the start switch, I think that the initially-very-slow-to-turn, free-turbine engine's propeller would probably bump into the person with a gentle nudge, just enough to encourage him or her to step away. No big deal, unlike the catastrophe that would have happened with a piston engine or a fixed-shaft turboprop!

So, yes, for you operators of F90s, C90A-series and 300s, I encourage you to do as the POH directs and to close the bus ties prior to the first start, for the purpose of making the beacon operate. (But if you don't, no one is going to be harmed.) On the other hand, for the F90-1 and the 350-series, Beechcraft relocated the beacon to the triple-fed bus, so it works regardless of whether the generator bus ties are closed or not. Hence, those POH procedures do not direct the pilot to close the ties initially. (For the model 300 only, the fuel quantity gauges don't work until the generator buses are on line, so it is especially important to close the ties manually to verify the amount of fuel onboard before starting.)

For nighttime starts, for *all* five-bus models, it is best to always close the generator ties prior to starting so that *all* external and internal lighting is available, as desired.

I hope this review of the history of the King Air's electrical design has been of interest, allowing you to have a better understanding of how the electrical system evolved in the particular model that you are flying. KA

King Air expert Tom Clements has been flying and instructing in King Airs for over 46 years and is the author of "The King Air Book" and "The King Air Book II." He is a Gold Seal CFI and has over 23,000 total hours with more than 15,000 in King Airs. For information on ordering his books, contact Tom direct at *twcaz@msn.com*. Tom is actively mentoring the instructors at King Air Academy in Phoenix.

If you have a question you'd like Tom to answer, please send it to Editor Kim Blonigen at *editor@blonigen.net*.

Wichita Orphans (Part One)

In 1939 engineers at Boeing Aircraft Company's Wichita Division responded to an Army Air Corps bid to design an "attack bomber" that would later become classified as a medium bomber. The photograph shows the Stearman Division's entry, designated the X-100, in its original configuration. The all-metal monoplane was powered by Pratt & Whitney R-2180 Twin Hornet static, air-cooled radial engines, each rated at 1,150 horsepower. (Kansas Aviation Museum)

The airplane designated the XA-21 by the Air Corps, underwent a series of modifications to the airframe that centered on the cockpit and nose sections. Company test pilot "Deed" Levy stands second from left. The main landing gear retracted aft. (Kansas Aviation Museum)

Boeing Aircraft Company's Wichita division created the X-100, X-120 and X-90 monoplanes that were state-of-the-art in their day, but whose wings were clipped by the frenetic pace of wartime combat aircraft design.

by Edward H. Phillips

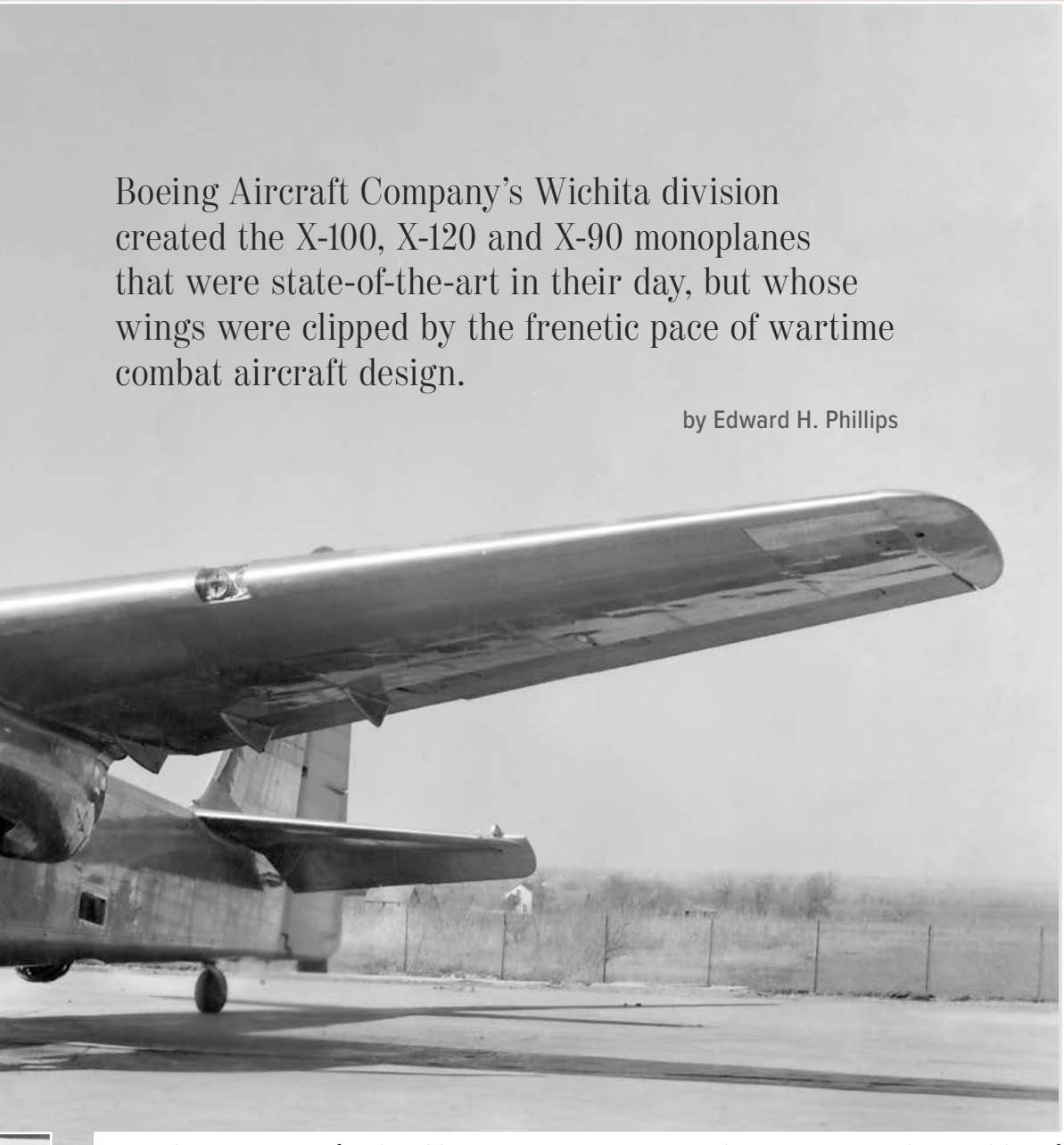

The invasion of Poland by Germany in September 1939 gave the world its first glimpse of the bludgeoning power of the Nazi Blitzkreig – "lightning war." After only 48 hours of fighting the Luftwaffe had largely succeeded in shooting the Polish air force out of the sky, while the Wehrmacht swiftly vanquished the Polish army. Hitler's aggression, however, was quickly met by declarations of war from England and France. World War II had officially begun.

In Wichita, Kansas, few people were concerned about the growing conflict across the vast Atlantic Ocean. America, and its leader, President Franklin D. Roosevelt, held firmly to a policy of isolationism and wanted nothing to do with Europe's war. The only threat facing Julius Schaefer as he led Boeing Aircraft Company's Stearman Division into the final months of 1939, was how to create more floor space to build airplanes for the United States Army Air Corps, the United States Navy and customers in Latin and South America. Only three weeks before Hitler struck Poland, the United States War Department had issued contracts worth more than $680,000 for training aircraft, along with an option for more that could drive the price upward toward $2 million.

Photographs of the XA-21 in flight are rare, as only one was built. The airplane had a wingspan of 65 feet, length of 55 feet and stood 14 feet tall at the tail section. It had a maximum range of 720 statute miles carrying a bomb load of 1,200 pounds at a cruising speed of 200 mph.
(Courtesy Walter House Collection)

As 1938 drew to a close, however, a special group of 58 engineers, including five from the Boeing Aircraft Company in Seattle, Washington, were hard at work completing the design and construction of a new airplane that workers dubbed "mystery ship." Schaefer had known about the project since early 1938 when the Army Air Corps released bids for a twin-engine monoplane that could carry up to 1,200 pounds of bombs at a speed of at least 200 mph across a distance of 1,200 statute miles – the Army was on the hunt for an attack bomber.

Five airframe manufacturers responded to the Army's request: Boeing Aircraft Company, North American Aviation in California, the Martin company in Maryland; Bell Aircraft Company in New York, and the Douglas Aircraft Company in California. After reviewing the Army's specifications for the bomber, Bell Aircraft withdrew from the competition. The other four companies proceeded with design work. The Stearman division's candidate was designated "X-100." The Air Corps stipulated that a prototype airplane had to be delivered by March 17, 1939, and competitors had to build the aircraft at their own expense – Uncle Sam would not pick up the tab. In addition, companies were to design, build and present the airplane to the Air Corps for evaluation.

Boeing documents state that preliminary designs were studied by engineers in Seattle and in Wichita. The X-100's overall configuration was to be established by Boeing but the bomber would be built by the Stearman Division. As time progressed the X-100 became the XA-21. It was like no other airplane the Stearman Division had built up to that time, chiefly because of its all-metal, semi-monocoque fuselage. The aircraft was powered by two Pratt & Whitney 14-cylinder radial engines, featured electrically-operated retractable landing gear and Fowler-type wing flaps. Aircrew consisted of the pilot, bombardier and radio operator (who doubled as an aerial gunner). The pilot and bombardier sat in tandem beneath a large, enclosed canopy, while the gunner was stationed aft and had access to four 0.30-caliber machine guns.

The 14-cylnder, R-2180 radial engines each produced 1,150 horsepower at 2,350 RPM with 1,400 horsepower at 2,500 RPM available for takeoff, if needed. Maximum takeoff weight was 18,230 pounds. The wing spanned 65 feet and featured a total wing area of 607 square feet. The fuselage was 55 feet in length and the tip of the vertical stabilizer stood 14 feet, two inches off the ground.

The XA-21 was revealed to the public early in 1939, but because of the airplane's military mission, only a few photographs were released by the Air Corps. Going one step further, the Army asked that the citizens of Wichita, "as a matter of patriotism, not take any pictures of the plane as it had many secret features, and newspapers are not to publish any except official pictures released by the War Department." The prototype bomber was rolled out of the factory on January 25, 1939. After a series of thorough pre-flight inspections and systems checks, the XA-21 took to the skies above Wichita on its first flight, flown by Boeing test pilot Edmund T. "Eddie" Allen in the left seat, and Stearman Division pilot David "Deed" Levy in the bombardier's position.

Allen and Levy continued to fly the new bomber until March 15, when it was delivered to the Air Corps at Wright Field near Dayton, Ohio. Army pilots conducted a series of flight trials that pitted Boeing's airplane against the Martin XA-22 (Model 167 Maryland) and the North American Aviation NA-40. A fourth candidate, the Douglas Model 7B, had crashed a few weeks earlier and was out of the competition, and on April 11 the NA-40 crashed during a demonstration flight at Wright Field. As a result, neither the XA-21 nor the XA-22 were declared the winner.

In addition, the results were deemed indecisive because the Air Corps had made significant changes to its requirements for the attack bomber during the months when the four competing airplanes were being built. In January 1939, while the XA-21 was undergoing flight tests, the Army released its new proposal and awarded a contract to the Douglas Aircraft Company's DB-7 (Army Air Corps A-20 Havoc) based solely on drawings and technical data.

Following the end of flights tests at Wright Field, the XA-21 returned to Wichita late in April 1939. During that summer, the bomber underwent modifications to convert the large, glass nose section into a more conventional configuration featuring a stepped windshield design. The Air Corps eventually purchased the airplane and it was delivered on the same day that Germany invaded Poland – Sept. 1, 1939. The Boeing bomber, along with Martin's XA-22, were flown as experimental test platforms for more than two years before the United States entered World War II in December 1941.[1]

Although the XA-21 failed to win any contracts from the Army Air Corps, loss of the competition was not a major disappointment to the Boeing Aircraft Company that conceived it nor the Stearman Division that built it. Both entities were swamped with orders for primary trainers and the B-17 heavy bomber and more orders were imminent. On September 16, 1940, the Stearman Division was handed a contract worth more than $6 million for hundreds more primary trainers, plus spare parts, for the Air Corps.

The Stearman factory, however, was not the only Wichita company to benefit from the latest tidal wave of

Harold W. Zipp (left) was among the engineers that designed the X-100 as well as other designs that originated at Boeing's Wichita Division. C.F. Schlatter (right) served in the Army Air Corps. The two men posed for the camera beside a factory-fresh PT-13A. (Kansas Aviation Museum)

Before America's entry into World War II the Wichita Division designed and built a prototype monoplane as a potential replacement for PT-13 and PT-17 primary trainers. Designated Model 90, the two-place ship was powered by a Lycoming radial engine rated at 225 horsepower. The Army Air Corps tested the ship and decided it had potential as a basic, not primary, trainer. (Kansas Aviation Museum)

orders for new airplanes. Dwane Wallace and the Cessna Aircraft Company received a contract from the Royal Canadian Air Force to build the Crane I – a military version of the popular commercial Model T-50 that first flew in March 1939. The Canadian order came on the heels of a contract worth more than $1 million from the U.S. War Department for 33 advanced, multi-engine training versions of the T-50 designated AT-8. One other major Wichita manufacturer, Beech Aircraft Corporation, held multiple contracts worth more than $9 million for military versions of the Model 17 cabin biplane and the Model 18 twin-engine transport. Taken all together, in September 1940 Boeing's Stearman Division, Cessna Aircraft and Beech Aircraft were scrambling to build $40 million-worth of training, transport and liaison airplanes.

In addition to the X-100/XA-21 project, by 1939 officials at the Boeing Aircraft Company sought to preserve its reputation and leadership as a major supplier of primary training airplanes. In 1936 preliminary studies were authorized and these continued into 1937

when the decision was made to design a low-wing, tandem-seat monoplane as a potential replacement for the venerable Model 75 series biplanes. As a result, Project 18A was initiated to create an airplane that would utilize a maximum number of parts and assemblies from the PT-13 and PT-17. Boeing assigned 26 engineers to the program, and based on encouragement from the Army Air Corps, by September 1939 a prototype designated the Model X90 was to be built on speculation.[2]

To minimize the use of strategic materials needed for the war effort, the X90 featured a wood wing and empennage and the forward fuselage section used welded steel tubing. The aft fuselage was of all-metal, semi-monocoque construction. The conventional main landing gear was fixed and the cockpit was covered by a sliding canopy. A Lycoming R-680 radial engine rated at 225 horsepower was chosen for the prototype, although the airframe was stressed to accept engines of up to 450 horsepower.

The prototype was ready for its first flight Nov. 1, 1940, and initial flight tests were conducted that month at the Wichita municipal airport. One month later, on December 1, 1940, the Air Corps requested demonstration flights at Wright Field and "Deed" Levy delivered the ship as planned. At Wright Field the X90 underwent a series of evaluations, including replacement of the Lycoming powerplant with a 450-horsepower Pratt & Whitney R-985-AN-1 radial engine. When the Air Corps completed its work, the airplane was flown to Naval Air Station Anacostia near Washington, D.C., where it was demonstrated to the Navy. Both the Army and Navy liked the X90 and recognized its potential as a replacement for the PT-13 and PT-17.

The monoplane trainer returned to Wichita in February 1941 and the original flight test program outlined by Boeing resumed. Unfortunately, the X90 was introduced at a time when war clouds were gathering over Europe and the Stearman Division's rough-and-ready PT-13 and PT-17 biplanes were already in mass production and providing excellent service in the field. Taking these factors into account, the War Department lost interest in the new trainer.

In May 1941, however, Boeing and the Army Air Corps opened negotiations that resulted in a contract for a basic training version designated the XBT-17. Modifications specified by the Air Corps were made to the prototype X90 and Boeing delivered the XBT-17 to the Army in January 1942. By that time, the United States was at war with the Axis Powers and once again, the War Department's deepening concerns about a shortage of aluminum alloy and other materials, led to the Army's decision not to place orders for the XBT-17.[3]

Despite failure of the XA-21 and XBT-17 programs, in 1942 the Boeing Aircraft Company responded to an Air Corps competition to select an airplane to serve as a twin-engine advanced trainer. Before America entered the war, it had become increasingly apparent to Army brass that it would be necessary to train teams of men needed to fly bombers in combat. The aircraft's specific mission would be to teach aircrew how to work together as a team before they were assigned to an operational training unit. The Wichita Division prepared a proposal that was based on a series of studies conducted during 1939-1940, known as Project 26.

Late in 1940 the company received a request for bid and submitted its design in October, but the Army's requirements for an aircrew trainer had changed so radically that no further action was taken until April 1941, when Boeing received another request for proposals. The Army stipulated that the airplane had to be built using as many non-strategic materials as possible. Finally, after the Air Corps made more changes to its requirements, Boeing signed a contract to build two airplanes designated Model X-120 (Army XAT-15).

Full responsibility for the design and construction of these trainers was given to 90 engineers at the Wichita Division. They developed a sub-scale model and conducted tests in a wind tunnel at Wichita University. A full-scale mockup of the twin-engine ship was completed and inspected by Army Air Corps officials in July 1941. Working 10-hour days, the engineering department generated a steady flow of drawings and blueprints to the factory, and the first prototype was completed and made its first flight in April 1942. The X-120 was conventional in many respects, with a welded steel tube fuselage structure covered with plywood and cotton fabric doped and shrunk to a tight fit. The wing panels and empennage assembly were built of wood and covered with plywood and fabric.

The first airplane was delivered to the Army in October 1942. The Air Crops liked the XAT-15 and awarded Boeing an initial contract for 75 XAT-15s that was soon increased to 325 by February 1942. To further expedite construction, contracts for 360 airplanes were given to the McConnell Aircraft Company in St. Louis, Missouri,

In 1941 the original Model 90 had evolved into the Model X-91 powered by a nine-cylinder Pratt & Whitney R-985 radial engine developing 450 horsepower. Flight tests in 1942 led to the Air Corps rejecting the design. (Kansas Aviation Museum)

and the Bellanca Aircraft Company in New Castle, Delaware. The Wichita Division remained responsible for all engineering data required to build the airplanes.

The XAT-15 was powered by two Pratt & Whitney R-1340-AN-1 radial engines, each rated at 550 horsepower. Wingspan was 59 feet 8 inches, length 42 feet 4 inches and height 13 feet 1 inch. Maximum weight was 14,355 pounds, maximum speed was 207 mph, cruising speed was 185 mph. The Bombay accommodated 10 100-lb. practice bombs.

As the war progressed it became clear to officers at the front lines of the United States Army Air Forces that the war was driving massive changes that needed to be incorporated into the design of new combat aircraft. In addition, there was a movement within the Air Corps toward establishing specialized schools for training aerial gunners, bombardiers, navigators and pilots instead of coordinating their training inflight. That change essentially obviated the XAT-15's mission and the production contracts were quickly cancelled. Only the two prototypes were built. The Air Corps, however, did award contracts to Fairchild Aircraft Corporation for the all-wood AT-21 specifically to train gunners in the operation of powered turrets. KA

Notes:

1. Martin's XA-22 eventually was placed into production as part of America's effort to supply England and France with combat aircraft. France had ordered 115 and when war broke out in Europe, the order was increased to 215. When Germany overran France in May-June 1940, the surviving bombers were flown to England and absorbed into the Royal Air Force as the Maryland Mk. I and Mk. II. Although it was obsolete by 1940 standards, the "Maryland" performed well early in the war against the Nazi onslaught.
2. Hoffman, Raymond J.B.: "History of Boeing Airplanes in Wichita," Pages 10-11. Boeing Aircraft Company, March 10, 1946.
3. Ibid

Another design created by Wichita Division engineers was the X-120 powered by two Pratt & Whitney R-1340 radial engines, each rated at 550 horsepower. The Army Air Corps designated the ship XAT-15 for evaluation as a twin-engine monoplane intended to train aircrews before they were assigned to combat units. The Air Corps, however, opted for the Fairchild AT-21. (Kansas Aviation Museum)

Ed Phillips, now retired and living in the South, has researched and written eight books on the unique and rich aviation history that belongs to Wichita, Kan. His writings have focused on the evolution of the airplanes, companies and people that have made Wichita the "Air Capital of the World" for more than 80 years.

G1000 NXi Integrated with Blackhawk Engine+ Upgrade for King Air 300 and 350

Garmin® International, Inc. recently announced that the G1000® NXi flight deck is now available for integration with the Blackhawk Aerospace XP67A Engine+ Upgrade for the King Air 300 and King Air 350, adding a significant benefit to those looking to maximize these aircraft. Additionally, Garmin has expanded its Supplemental Type Certificate (STC) approval to now include King Air 350 aircraft with a max gross weight of 16,500 lbs.[1], bringing enhanced capability to operators looking to maximize payload and efficiency.

Garmin said they have answered their customers' requests to include the engine upgrade interface to their system, which will further improve performance for the King Air 300 and 350 models, and the increased payload for the 350 will be especially advantageous for special missions operators.

The Blackhawk Aerospace XP67A Engine+ Upgrade for the King Air 300 includes two factory-new Pratt & Whitney PT6A-67A engines and Hartzell 5-bladed composite propellers, combined to deliver maximum cruise speeds as high as 343 knots true air speed (KTAS) with an initial rate of climb up to 4,000 feet per minute (FPM). This performance increase results in only 19 minutes to climb from sea-level to flight-level 350 – half the time compared to a King Air 300 without this upgrade. Blackhawk Aerospace is a popular provider of King Air upgrades, already offering an engine upgrade for the King Air 350 that integrates with the G1000 NXi.

With the latest G1000 NXi approval, King Air 350 owners and operators can now take advantage of an increased payload, providing significant performance enhancements. Along with the separate STC modifications, support for G1000 NXi-equipped King Air aircraft is now available via an enablement.

The G1000 NXi integrated flight deck upgrade for existing G1000-equipped King Air 300 and King Air 350 is available immediately through select Garmin dealers. King Air 300 and 350 owners and operators can easily upgrade to the G1000 NXi with minimal aircraft downtime and panel disruption as the displays preserve the same footprint and connectors, so panel modifications are not required. The upgraded components of the G1000 NXi also come with a two-year warranty, which is supported by Garmin's award-winning avionics product support team.

For additional information regarding the G1000 NXi upgrade for the King Air 300 and King Air 350, contact Scott Frye at *scott.frye@garmin.com*, or visit *www.garmin.com/KingAir*.

The Blackhawk Aerospace XP67A Engine+ Upgrade for the King Air 300 and King Air 350 is available immediately through Blackhawk Aerospace, and the increased gross weight STC for the King Air 350 is available from Textron Aviation. KA

1. This STC has been shown to be compatible with Textron Heavyweight Kit Installation, part number 130-4030-0001, 130-4030-0003 or 130-4030-0005 (as applicable by aircraft serial number), for B300 serial number FL-584 through FL-1030 (excluding FL-954 and FL-1010) and B300C serial number FM-25 through FM-65 or with production Textron B300 and B300C Heavyweight aircraft.

ADVERTISING INDEX

1st Source Bank ..... Inside Back Cover
Aerox Aviation Oxygen Systems 31
Avcon Industries Inc 16
AvFab 26
Banyan Air Service 28
Beech Medic LLC 32
Blackhawk Modifications..... Inside Front Cover
BLR Aerospace..... 7
Cleveland Wheels & Brakes 26
Elliott Aviation..... 5
Factory Direct Models..... 13
G&D Aero Products Inc..... 19
Hillaero Modification Center 31
Ice Shield/SMR Technologies 17
Innovative Solutions & Support..... 9
King Air Academy 25
Lee Aerospace 21
Lighthawk 32
Meta Aerospace LLC 13
More Company..... 16
National Flight Simulator 15
Pilots N Paws 32
Prop Sync Solutions..... 15
Raisebeck Engineering..... Back Cover
Select Airparts 11
Short-N-Numbers..... 20
Skywest Aviation Inc. 19
Trace Aviation..... 27
Yingling Aviation 30